THE Sōta™

TURBOCHEF



PERFORMANCE

Utilizing TurboChef's patented technology to rapidly cook food without compromising quality, the Sōta provides superior cooking performance while requiring less space and consuming less energy.

VENTILATION

- UL (KNLZ) listed for ventless operation.†
- EPA 202 test (8 hr):
  - Product: Pepperoni Pizzas
  - Results: 0.64 mg/m^3
  - Ventless Requirement: <5.00 mg/m^3
- Internal catalytic filtration to limit smoke, grease, and odor emissions.

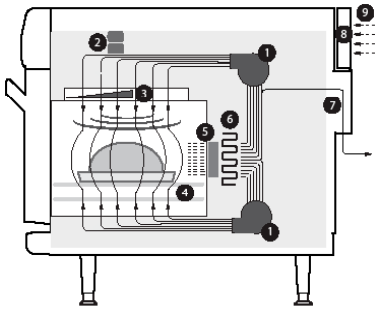

1. Blower Motors
2. Microwave System
3. Stirred Impinged Air (Top) and Microwave
4. Impinged Air (Bottom)
5. Catalytic Converter
6. Impingement Heater
7. Vent Tube Catalyst
8. Air Filter
9. Inlet Air for Cooling Electronic Components

EXTERIOR CONSTRUCTION

- Powder coated, corrosion-resistant steel outer wrap and door
- Die-cast aluminum front panels with matte-chrome accents
- Cool-to-touch exterior; all surfaces below 50°C
- Ergonomic matte-chrome door handle
- 4-inch adjustable legs
- 7-inch capacitive one-touch screen with tempered glass cover

INTERIOR CONSTRUCTION

- 201/304 stainless steel
- Fully welded and insulated cook chamber
- Removable rack and lower jetplate

STANDARD FEATURES

- Simple and intuitive one-touch controls with icons
- Independently-controlled dual motors for vertically-recirculated air impingement
- Top-launched microwave system
- Stirrer to help ensure even distribution of air and microwave
- Integral recirculating catalytic converter for UL (KNLZ) listed ventless operation
- External air filtration
- Vent catalyst to further limit emissions and odors
- Smart menu system capable of storing unlimited recipes
- Flash firmware updates via USB
- Single or dual-temperature interface
- Field-configurable for single or multiphase operation (requires service call)
- Self-diagnostics for monitoring oven components and performance
- Includes plug and cord (6 ft. nominal)
- Warranty – 1 year parts and labor
- Open Kitchen™ ready

CONNECTIVITY PART NUMBERS

- MDD-1001 - Initial equipment, two-way connectivity bundle
- MDD-1002 - Additional equipment, two-way connectivity bundle
- MDD-1003 - Additional year of subscription (PhD SAAS)

STANDARD ACCESSORIES

- 1 Oven Cleaner and Guard Kit (105701)
- 2 Solid Aluminum Pans (i1-9496)
- 1 Aluminum Paddle (i1-9716)

CERTIFICATIONS

This product conforms to the ventilation recommendations set forth by NFPA96 using EPA202 test method.

* Smart Voltage Sensor Technology does not compensate for lack of or over voltage situations. It is the responsibility of the owner to supply voltage to the unit according to the specifications on the back of this sheet.

† Ventless certification is for all food items except for foods classified as "fatty raw proteins." Such foods include bone-in, skin-on chicken, raw hamburger meat, raw bacon, raw sausage, steaks, etc. If cooking these types of foods, consult local HVAC codes and authorities to ensure compliance with ventilation requirements.
Ultimate ventless allowance is dependent upon AHJ approval, as some jurisdictions may not recognize the UL certification or application. If you have questions regarding ventless certifications or local codes, please email ventless.help@turbochef.com

TurboChef reserves the right to make substitutions of components or change specifications without prior notice.

DOC-1204 / Revision S / December 2024

2801 Trade Center Drive | Carrollton, TX 75007
+1 214-379-6000 | turbochef.com

TURBOCHEF

Sōta™

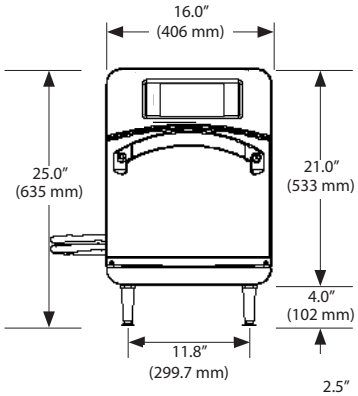

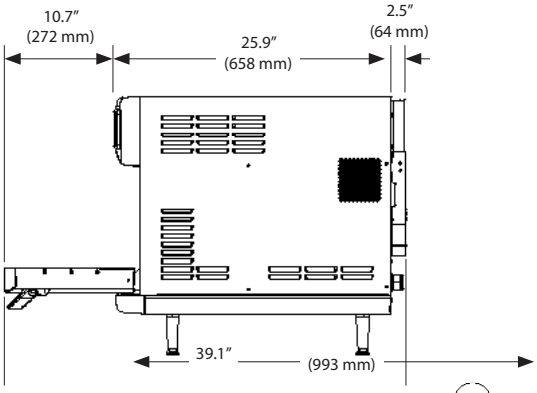

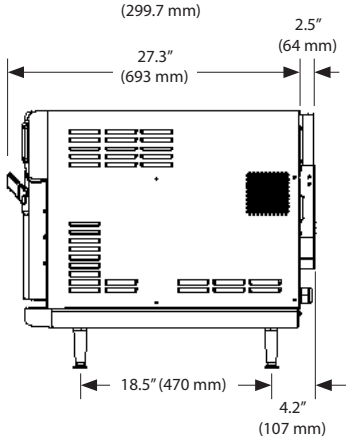

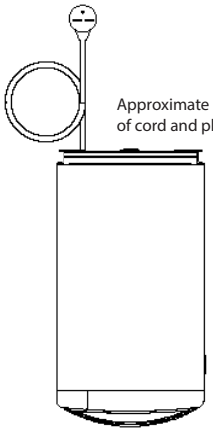

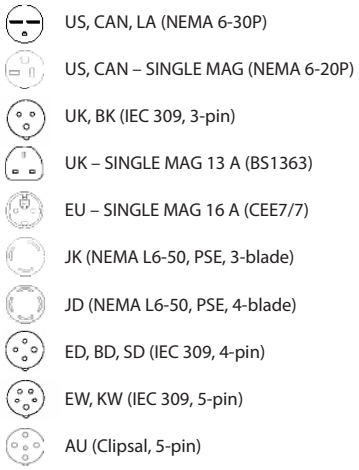

DIMENSIONS		
Single Units		
Height	25.0″	635 mm
Width	16.0″	406 mm
Depth	29.8″	757 mm
Weight: Standard / Single Mag	170 lb. / 135 lb.	77.1 kg / 61 kg
Cook Chamber		
Height	7.2″	183 mm
Width	12.5″	317 mm
Depth	10.5″	266 mm
Volume	0.54 cu.ft.	15.4 liters
Wall Clearance (Oven not intended for built-in installation)		
Top	5″	102 mm
Sides	2″	50 mm

SHIPPING INFORMATION

U.S.: All ovens shipped within the U.S. are packaged in a double-wall corrugated box banded to a wooden skid.
International: All International ovens shipped via Air or Less than Container Loads are packaged in wooden crates.

Box size: 37″ x 24″ x 37″ (940 mm x 610 mm x 940 mm)
Crate size: 38″ x 26″ x 38″ (965 mm x 660 mm x 965 mm)
Item class: 110 NMFC #26710 HS code 8419.81

Approximate boxed weight (standard/single mag): 205 lb. (93 kg) / 170 lb. (77.1 kg)
Approximate crated weight (standard/single mag): 275 lb. (125 kg) / 240 lb. (109 kg)

Minimum entry clearance required for box: 24.5″ (622 mm)
Minimum entry clearance required for crate: 26.5″ (673 mm)

⚠ TurboChef recommends installing a type D circuit breaker for European installations.

ELECTRICAL SPECIFICATIONS		
SINGLE PHASE		
US/Canada	i1-9500-801	208/240 VAC, 60 Hz, 30 amps Max Input: 6.2 kW, MW: 3.2 kW, HTR: 6.0 kW
US/Canada – Single Mag 20 A	i1-9500-836	208/240 VAC, 60 Hz, 20 amps Max Input: 4.2/4.8 kW, MW: 1.9 kW, HTR: 4.0/4.2 kW
Europe (UK)	i1-9500-802-UK	230 VAC, 50 Hz, 27 amps Max Input: 6.2 kW, MW: 3.2 kW, HTR: 6.0 kW
Europe (UK) – Single Mag 13 A	i1-9500-837-UK	230 VAC, 50 Hz, 13 amps Max Input: 3 kW, MW: 1.9 kW, HTR: 2.7 kW
Europe (EU) – Single Mag 16 A	i1-9500-838-UK	230 VAC, 50 Hz, 16 amps Max Input: 3.6 kW, MW: 1.9 kW, HTR: 2.7 kW
Brazil (BK)	i1-9500-806-BK	220 VAC, 60 Hz, 28 amps Max Input: 6.2 kW, MW: 3.2 kW, HTR: 6.0 kW
Latin America (LA)	i1-9500-807-LA	220 VAC, 60 Hz, 28 amps Max Input: 6.2 kW, MW: 3.2 kW, HTR: 6.0 kW
Japan (JK)	i1-9500-808-JK	200 VAC, 50 Hz, 30 amps Max Input: 6.2 kW, MW: 3.2 kW, HTR: 6.0 kW
Japan (JK)	i1-9500-810-JK	200 VAC, 60 Hz, 30 amps Max Input: 6.2 kW, MW: 3.2 kW, HTR: 6.0 kW
MULTIPHASE		
Europe Delta (ED)	i1-9500-803-ED	230 VAC, 50 Hz, 20 amps Max Input: 6.2 kW, MW: 3.2 kW, HTR: 6.0 kW
Europe Wye (EW)	i1-9500-804-EW	400 VAC, 50 Hz, 16 amps Max Input: 6.2 kW, MW: 3.2 kW, HTR: 6.0 kW
Australia Wye (AU)	i1-9500-805-AU	400 VAC, 50 Hz, 16 amps Max Input: 6.2 kW, MW: 3.2 kW, HTR: 6.0 kW
Japan Delta (JD)	i1-9500-809-JD	200 VAC, 50 Hz, 20 amps Max Input: 6.2 kW, MW: 3.2 kW, HTR: 6.0 kW
Japan Delta (JD)	i1-9500-811-JD	200 VAC, 60 Hz, 20 amps Max Input: 6.2 kW, MW: 3.2 kW, HTR: 6.0 kW
Korea/Middle East Wye (KW)	i1-9500-812-KW	400 VAC, 60 Hz, 16 amps Max Input: 6.2 kW, MW: 3.2 kW, HTR: 6.0 kW
Korea/Middle East Delta (SD)	i1-9500-813-SD	230 VAC, 60 Hz, 20 amps Max Input: 6.2 kW, MW: 3.2 kW, HTR: 6.0 kW

2801 Trade Center Drive | Carrollton, TX 75007
+1 214-379-6000 | turbochef.com